# Analysis

## Singly Reinforcement Beam

# 1)Assume Steel Yielded

$$\varepsilon_s \geq \varepsilon_y \longrightarrow f_s = f_y$$

# 2)Force=Force

| |
|---|
| **$C_c$**:-**C**ompression in **c**oncrete |
| **$T_s$**:-**T**ension in **s**teel |

$$T_s = C_c$$

$$(\text{stress})(\text{area}) = (\text{stress})(\text{area})$$

$$(f_s)(A_s) = (0.85 f_c)(a.b)$$

**Find a**

**Find c** ($c = \frac{a}{\beta}$)

$f_c \leq 28 \longrightarrow \boxed{\beta = 0.85}$

$28 < f_c < 56 \longrightarrow \boxed{\beta = 0.85 - 0.05(f_c - \frac{28}{7})}$

$f_c \geq 56 \longrightarrow \boxed{\beta = 0.65}$

# 3)Check Assumption

$$\varepsilon_y = \frac{fy}{E}$$

$$\varepsilon_s = 0.003\left(\frac{d-c}{c}\right)$$

$$\varepsilon_s \geq \varepsilon_y$$

- Assumption OK → Steel yielded
- Assumption Not OK → Steel not yielded

$$f_s = E\,\varepsilon_s$$

$$= (E*1000)\left(0.003\left(\frac{d-c}{c}\right)\right)$$

# 4)Mode of failure ($\varepsilon_s$)

$\varepsilon_s \geq 0.005$ → **Tension controlled**

$\varepsilon_y < \varepsilon_s < 0.005$ → **Transition controlled**

$\varepsilon_s \leq \varepsilon_y$ → **compression controlled**

# 5) Determine (Ø)

**Tension controlled** → $Ø = 0.9$

**Transition controlled** → $Ø = 0.65 + (\varepsilon s - 0.002)\frac{250}{3}$

**compression controlled** → $Ø = 0.65$

# 6)Determine Moment

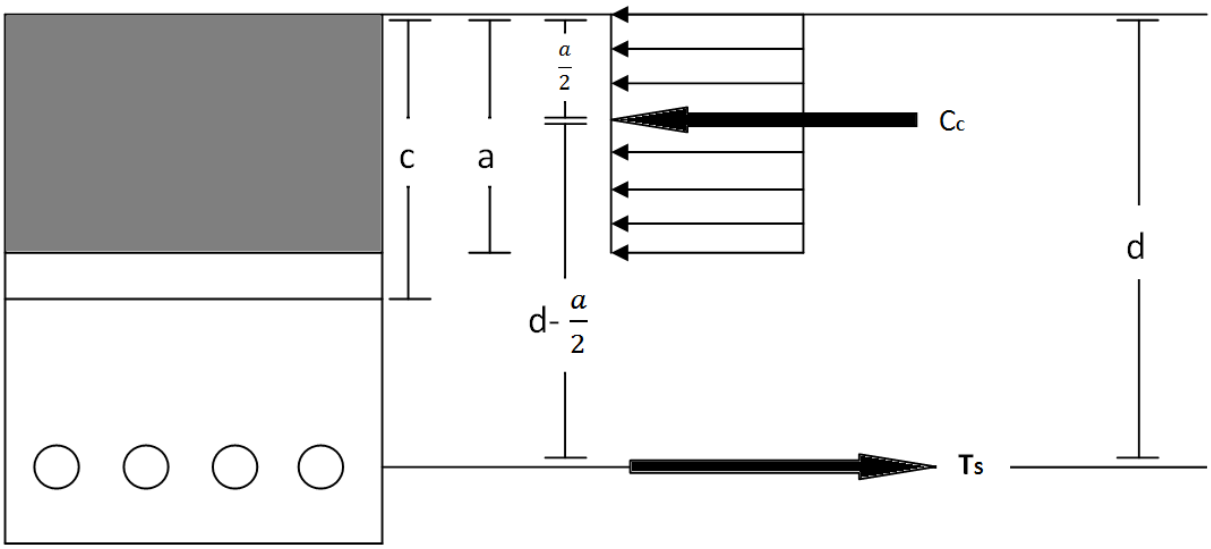


- **nominal moment capacity (Mn):-**

$$M_n = (\underline{force})(distance)$$

وحدة من القوى ضرب المسافة
بينهما يا بتوخذ ال Cc او Ts

$$= ((stress)(area))(distance)$$

$$= ((0.85f_c)(a.b))(d - \frac{a}{2})$$

- **design moment capacity (ØMn):-**

$$\boxed{\text{Ø}M_n = (\text{Ø})(M_n)}$$

- Example(1):-

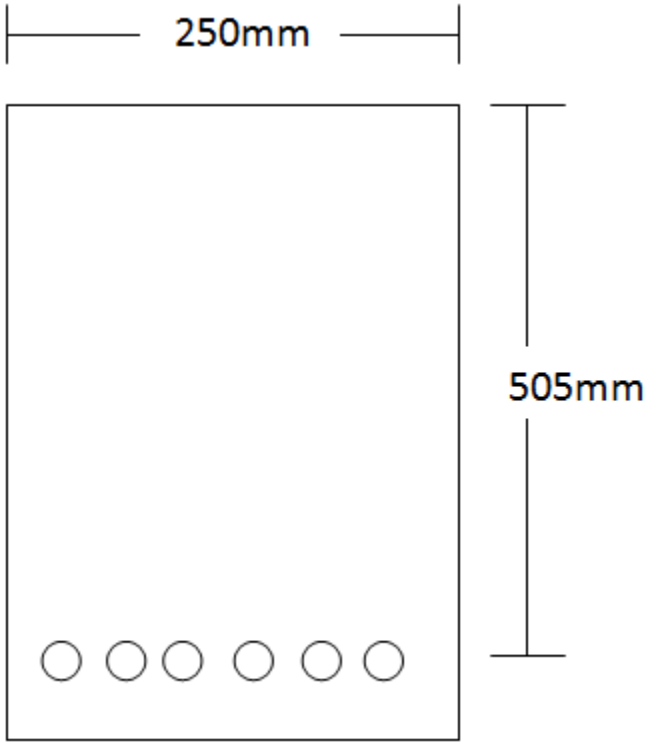


$A_S$=1530 $mm^2$

$f_c$=20 Mpa

$f_y$=420 Mpa

E=200 Gpa

Find design moment capacity.

- Solution:-

Assume $\varepsilon_s \geq \varepsilon_y \longrightarrow$ **$f_s = f_y \longrightarrow f_s = 420$**

**$T_s = C_c$**

(stress)(area)=(stress)(area)

$(f_s)(A_s)=(0.85f_c)(a.b)$

(420)(1530)=(0.85*20)(a*250)

**a=151.2 mm**

$c = \frac{a}{\beta}$

$c = \frac{151.2}{0.85}$

$\mathbf{c = 177.88mm}$

$f_c \leq 28 \longrightarrow \beta = 0.85$

Check $\varepsilon_s \geq \varepsilon_y$ :-

$\varepsilon_s = 0.003(\frac{d-c}{c})$

$= 0.003(\frac{505-177.88}{177.88})$

**=0.0055169**

$\varepsilon_y = \frac{fy}{E}$

$\varepsilon_y = \frac{420*10^6}{200*10^9}$ **=0.0021** $\varepsilon_s > \varepsilon_y$**..... OK**

**$\varepsilon_s \geq 0.005 \longrightarrow$ tension controlled $\longrightarrow$ Ø=0.9**

$$M_n = (\text{force})(\text{distance})$$

$$= ((\text{stress})(\text{area}))(\text{distance})$$

$$= ((0.85fc)(a.b))(d - \frac{a}{2})$$

$$= ((0.85*20)(151.2*250))(505 - \frac{151.2}{2})$$

$$= 275.93 \text{ KN.m}$$

$$\text{Ø}M_n = 0.9*275.93$$

$$= 248.33 \text{ KN.m}$$

Check As minimum :-

**larger of**

$$\frac{0.25\sqrt{fc}}{fy} b_w d = \frac{0.25\sqrt{20}}{420} 250 * 505 = \mathbf{336.07} \text{mm}^2$$

$$\frac{1.4 b_w d}{fy} = \frac{1.4*250*505}{420} = \mathbf{420.83} \text{mm}^2$$

**$A_{s\ min}$ = 420.83mm²**

$A_s > A_{s\ min}$ ....OK

- Example(2):-

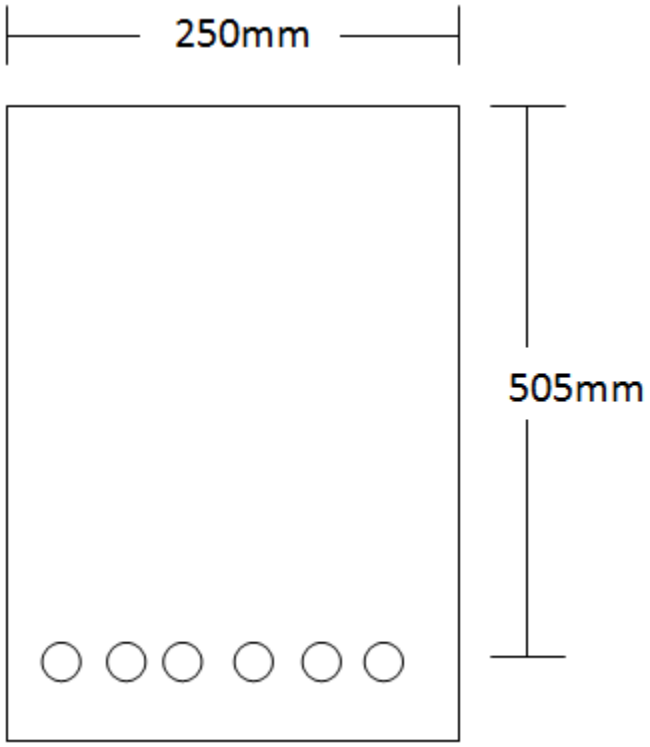


**<u>As=3060 mm²</u>**

$f_c$=20 Mpa

$f_y$=420 Mpa

E=200 Gpa

Find design moment capacity.

- Solution:-

Assume $\varepsilon_s \geq \varepsilon_y \longrightarrow$ **$f_s = f_y$** $\longrightarrow$ **$f_s = 420$**

**$T_s = C_c$**

(stress)(area)=(stress)(area)

$(f_s)(A_s)=(0.85f_c)(a.b)$

(420)(3060)=(0.85*20)(a*250)

**a=302.4mm**

$f_c \leq 28 \longrightarrow \beta = 0.85$

$$c = \frac{a}{\beta}$$

$$c = \frac{302.4}{0.85}$$

$$\mathbf{c = 355.76mm}$$

Check $\varepsilon_s \geq \varepsilon_y$ :-

$$\varepsilon_s = 0.003\left(\frac{d-c}{c}\right)$$

$$= 0.003\left(\frac{505-355.76}{355.76}\right)$$

**=0.001258**

$$\varepsilon_y = \frac{fy}{E}$$

$$\varepsilon_y = \frac{420*10^6}{200*10^9} = \mathbf{0.0021}$$

$\varepsilon_s < \varepsilon_y$**..... Not Ok**

$\varepsilon_s < \varepsilon_y \longrightarrow$ **compression controlled** $\longrightarrow$ **Ø=0.65**

$$(E*10^3 0.003(\frac{d-c}{c}))(As)=(0.85fs)(c.\beta.b)$$

$$(200*10^3 0.003(\frac{505-c}{c}))(3060)=(0.85*20)(c*0.85*250)$$

$$\boxed{\mathbf{c = 312.65mm}}$$

a= β.C

a=0.85*312.65

$$\boxed{\mathbf{a=265.75mm}}$$

**Mn=(force)(distance)**

**=((stress)(area))(distance)**

**= ( (0.85fc)(a.b))(d- $\frac{a}{2}$)**

**= ( (0.85*20)(265.75*250))(505- $\frac{265.75}{2}$ )**

**=420.29 KN.m**

**ØMn**=0.65*275.93

=**273.21 KN.m**

# Analysis

## Doubly Reinforcement Beam

# 1)Assume All Steel Yielded

steel <u>Tension</u> Yielded $\varepsilon_s \geq \varepsilon_y \longrightarrow f_s = f_y$

steel <u>Compression</u> Yielded $\varepsilon`_s \geq \varepsilon_y \longrightarrow f`_s = f_y$

# 2)Force=Force

| |
|---|
| $C_c$:-Compression in concrete |
| $C_s$:-Compression in steel |
| $T_s$:-Tension in steel |

$$T_s = C_c + C_s$$

$$(\text{stress})(\text{area}) = (\text{stress})(\text{area}) + (\text{stress})(\text{area})$$

$$(f_s)(A_s) = (0.85 f_c)(a.b) + (f`_s)(A`_s)$$

Find a

Find c ($c = \frac{a}{\beta}$)

$f_c \leq 28 \longrightarrow \boxed{\beta = 0.85}$

$28 < f_c < 56 \longrightarrow \boxed{\beta = 0.85 - 0.05(f_c - \frac{28}{7})}$

$f_c \geq 56 \longrightarrow \boxed{\beta = 0.65}$

# 3)Check Assumption

$\varepsilon_y = \frac{fy}{E}$

$\varepsilon`_s = 0.003(\frac{c-d`}{c})$

$\varepsilon_s = 0.003(\frac{d-c}{c})$

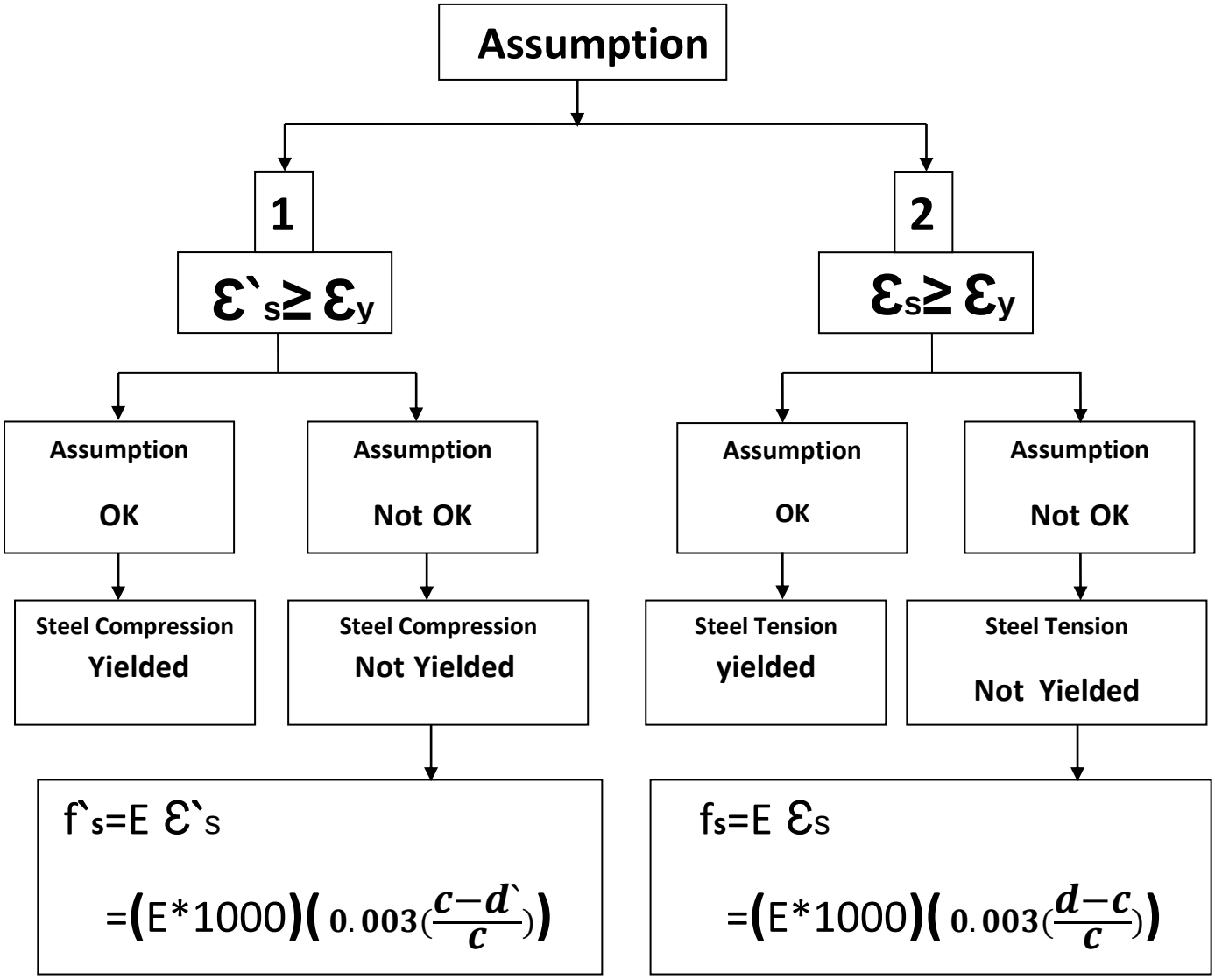


- **Note:-**

  $d` = 65mm$

# 4)Mode of failure ($\varepsilon_s$)

$\varepsilon_s \geq 0.005$ → **Tension controlled**

$\varepsilon_y < \varepsilon_s < 0.005$ → **Transition controlled**

$\varepsilon_s \leq \varepsilon_y$ → **compression controlled**

# 5) Determine (Ø)

**Tension controlled** → $\text{Ø} = 0.9$

**Transition controlled** → $\text{Ø} = 0.65 + (\varepsilon s - 0.002)\frac{250}{3}$

**compression controlled** → $\text{Ø} = 0.65$

# 6)Determine Moment

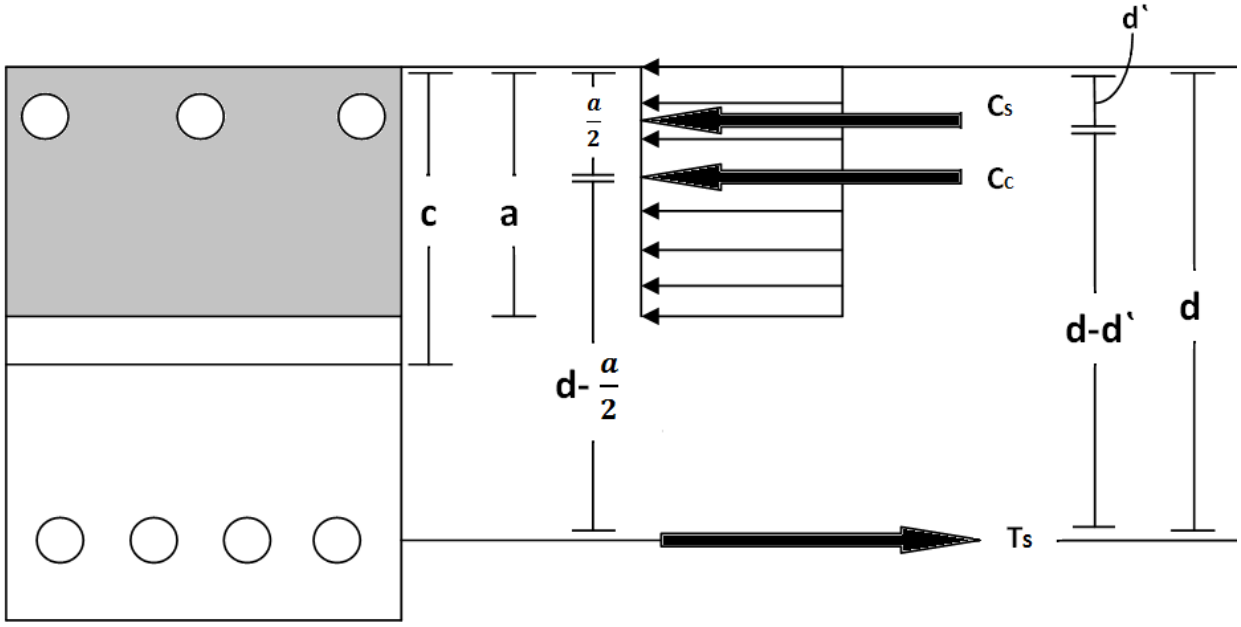


- **nominal moment capacity (Mn):-**

**Mn=(force)(distance)+(force)(distance)**

**=(Cc)(distance)+(Cs)(distance)**

**=((stress)(area))(distance)+((stress)(area))(distance)**

**=((0.85fc)(a.b))( d- $\frac{a}{2}$ )+((f`s)(A`s))(d-d`)**

- **design moment capacity (ØMn):-**

$$\boxed{ØM_n=(Ø)(M_n)}$$

# 7)Check As Minimum

**As min = larger of** $\begin{cases} \dfrac{0.25\sqrt{fc}}{fy} b_w d \\ \dfrac{1.4 b_w d}{fy} \end{cases}$

- **Note:-**

  **in rectangular beam** $b_w = b$

- Example(1):-

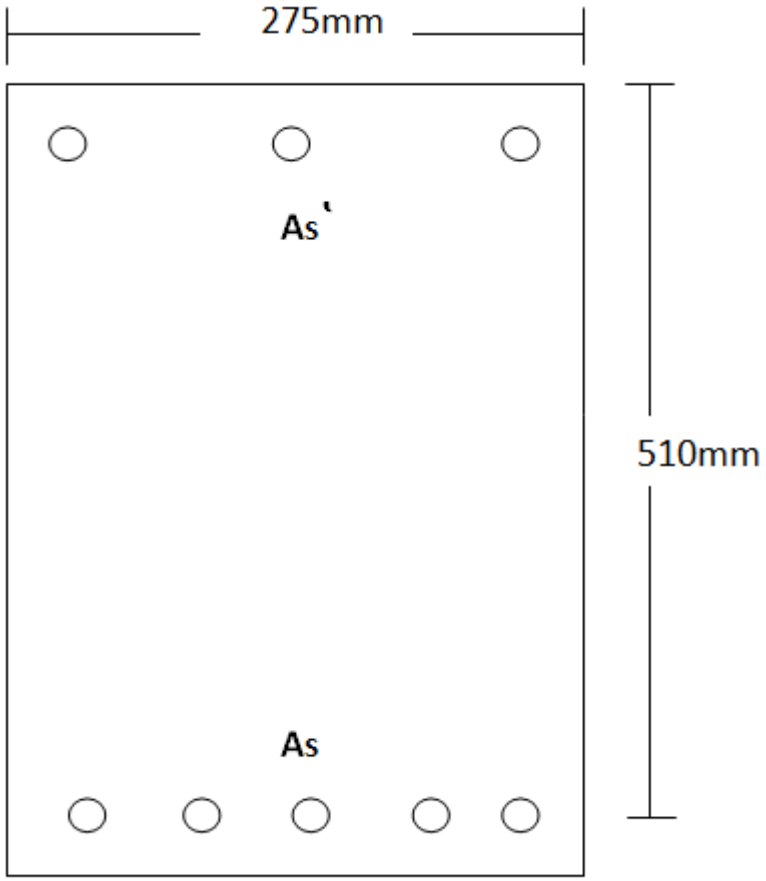


$A_s$=3060 $mm^2$

$A`_s$ =852 $mm^2$

$f_c$=20 Mpa

$f_y$=420 Mpa

E=200 Gpa

Find design moment capacity.

- Solution:-

Assume $\varepsilon_s \geq \varepsilon_y \longrightarrow f_s = f_y \longrightarrow f_s = 420$

$\varepsilon`_s \geq \varepsilon_y \longrightarrow f`_s = f_y \longrightarrow f`_s = 420$

$$T_s = C_c + C_s$$

(stress)(area)=(stress)(area)+(stress)(area)

$$(f_s)(A_s) = (0.85fc)(a.b) + (f`_s)(A`_s)$$

$$(420)(3060) = (0.85*20)(a*275) + (420)(852)$$

$$\boxed{a = 198.36 \text{ mm}}$$

$$c = \frac{a}{\beta}$$

$$c = \frac{198.36}{0.85}$$

$$\boxed{\mathbf{c = 233.36mm}}$$

$fc \leq 28 \longrightarrow \beta = 0.85$

1)Check $\varepsilon`_s \geq \varepsilon_y$

$$\varepsilon`_s = \mathbf{0.003}\left(\frac{\boldsymbol{c - d`}}{\boldsymbol{c}}\right)$$

$$= \mathbf{0.003}\left(\frac{233.36 - 65}{233.36}\right)$$

**=0.002164**

$\varepsilon_y = \frac{fy}{E}$

$\varepsilon_y = \frac{420*10^6}{200*10^9}$ **=0.0021** $\varepsilon`_s \geq \varepsilon_y$ **...Assumption(1) OK**

2)Check $\varepsilon_s \geq \varepsilon_y$

$\varepsilon_s = 0.003(\frac{d-c}{c})$

$= 0.003(\frac{510-233.36}{233.36})$

**=0.003556** $\varepsilon_s \geq \varepsilon_y$ **...Assumption(2) OK**

$\varepsilon_y < \varepsilon_s < 0.005 \longrightarrow$ **Transition controlled**

$Ø = 0.65 + (\varepsilon s - 0.002)\frac{250}{3}$

$Ø = 0.65 + (0.003556 - 0.002)\frac{250}{3}$

**Ø=0.78**

**Mn=(force)(distance)+(force)(distance)**

**=($C_c$)(distance)+($C_s$)(distance)**

**=((stress)(area))(distance)+((stress)(area))(distance)**

**=((0.85$f_c$)(a.b))( d- $\frac{a}{2}$ )+((f`s)(A`s))(d-d`)**

**=((0.85*20)(198.36*275))( 510- $\frac{198.36}{2}$ )+((420)(852))(510-65)**

**=540.20** KN.m

**ØMn**= 0.78*540.20

= **421.36** KN.m

- Example(2):-

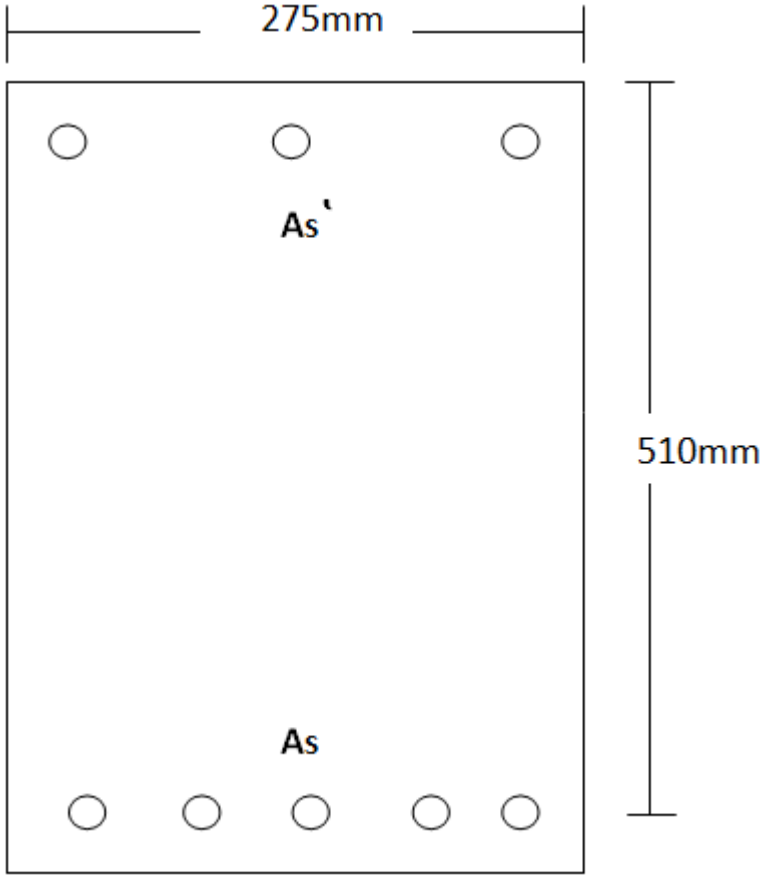


$A_s$=3060 $mm^2$

**<u>A`s =1700 $mm^2$</u>**

$f_c$=20 Mpa

$f_y$=420 Mpa

E=200 Gpa

Find design moment capacity.

- Solution:-

Assume $\varepsilon_s \geq \varepsilon_y \longrightarrow f_s = f_y \longrightarrow f_s = 420$

$\varepsilon`_s \geq \varepsilon_y \longrightarrow f`_s = f_y \longrightarrow f`_s = 420$

$$T_s = C_c + C_s$$

(stress)(area)=(stress)(area)+(stress)(area)

$$(f_s)(A_s) = (0.85fc)(a.b) + (f`_s)(A`_s)$$

(420)(3060)=(0.85*20)(a*275)+(420)**(1700)**

**a=122.18 mm**

$c = \frac{a}{\beta}$

$c = \frac{122.18}{0.85}$

$\mathbf{c = 143.74mm}$

fc≤28 ⟶ β=0.85

1)Check $\varepsilon`_s \geq \varepsilon_y$

$\varepsilon`_s = \mathbf{0.003}(\frac{\boldsymbol{c - d`}}{\boldsymbol{c}})$

$= \mathbf{0.003}(\frac{143.74 - 65}{143.74})$

**=0.001643**

$\varepsilon_y = \frac{fy}{E}$

$\varepsilon_y = \frac{420*10^6}{200*10^9}$

**=0.0021**

$\varepsilon`_s < \varepsilon_y$**...Assumption(1) <u>Not</u> OK**

---

$(f_s)(A_s) = (0.85f_c)(c.\beta.b) + (E*10^3*0.003(\frac{c-d`}{c}))(A`_s)$

$(420)(3060) = (0.85*20)(c*0.85*275) + (200*10^3*0.003(\frac{c-65}{c}))(1700)$

**C=166.77 mm**

---

$a = \beta.C$

$a = 0.85*166.77$

**a=141.75mm**

$\varepsilon`_s = 0.003(\frac{c-d`}{c})$

$= 0.003(\frac{166.77-65}{166.77})$

**=0.00183**

**هون لا تنعجق احنا فرضنا انو الحديد في منطقة الكومبرشن yielded ولما شيكنا عليه من خلال $\varepsilon`_s$ طلع مش yielded فلما تغير ال f`s من 420 ل $f`_s = E\varepsilon`_s$ و تحسب c جديدة و ترجع تشيك على $\varepsilon`_s$ لازم تطلع $\varepsilon`_s < \varepsilon_y$**

2)Check $\varepsilon_s \geq \varepsilon_y$ :-

$$\varepsilon_s = 0.003\left(\frac{d-c}{c}\right)$$

$$= 0.003\left(\frac{510-166.77}{166.77}\right)$$

$= 0.006174....$ $\varepsilon_s \geq \varepsilon_y$ **Assumption(2) OK**

$\varepsilon_s \geq 0.005$ ⟶ **tension controlled** ⟶ **Ø=0.9**

---

$M_n$ = (force)(distance)+(force)(distance)

= ($C_c$)(distance)+($C_s$)(distance)

= ((stress)(area))(distance)+((stress)(area))(distance)

$= ((0.85f_c)(a.b))\left(d - \frac{a}{2}\right) + ((f`_s)(A`_s))(d-d`)$

لا تخربط و تعوضها 420 محنا شيكنا عليها و طلعت

مش 420 طلعت $f`_s = E\varepsilon`_s$

$$= ((0.85*20)(141.75*275))\left(510 - \frac{141.75}{2}\right) + ((200*10^3*0.00183)(1700))(510-65)$$

= **567.87** KN.m

للتحويل الوحدات

الناتج إلي بطلع معك يا بتضربه ب $1*10^{-6}$ أو بس يطلع الناتج اكبس على آلة الحاسبة كبسة ENG

---

$Ø M_n$ = 0.9*567.87

= **511.08** KN.m

# ❖ Analysis of T-beam :-

خطوات حل سؤال ال T-beam :-

1. حدد الحالة إلي عندك بالسؤال اذا T-beam أو rectangular beam لانه ممكن يكون شكله T وبس تشيك عليه يطلع rectangular beam .
2. اذا كان singly T beam هناك طرقتين للحل الاولى: تقسم البيم الى beam flange و beam web و الثانية : تقسم شكل ال T الى مستطيلين.
3. اذا كان doubly T beam حل بس على طريقة تقسيم ال T الى مستطيلين.

مع الشرح و الامثلة تحت ان شاء الله رح تفهم.

## Cases of T-beam:

**1)Flange in Tension → Rectangular beam**

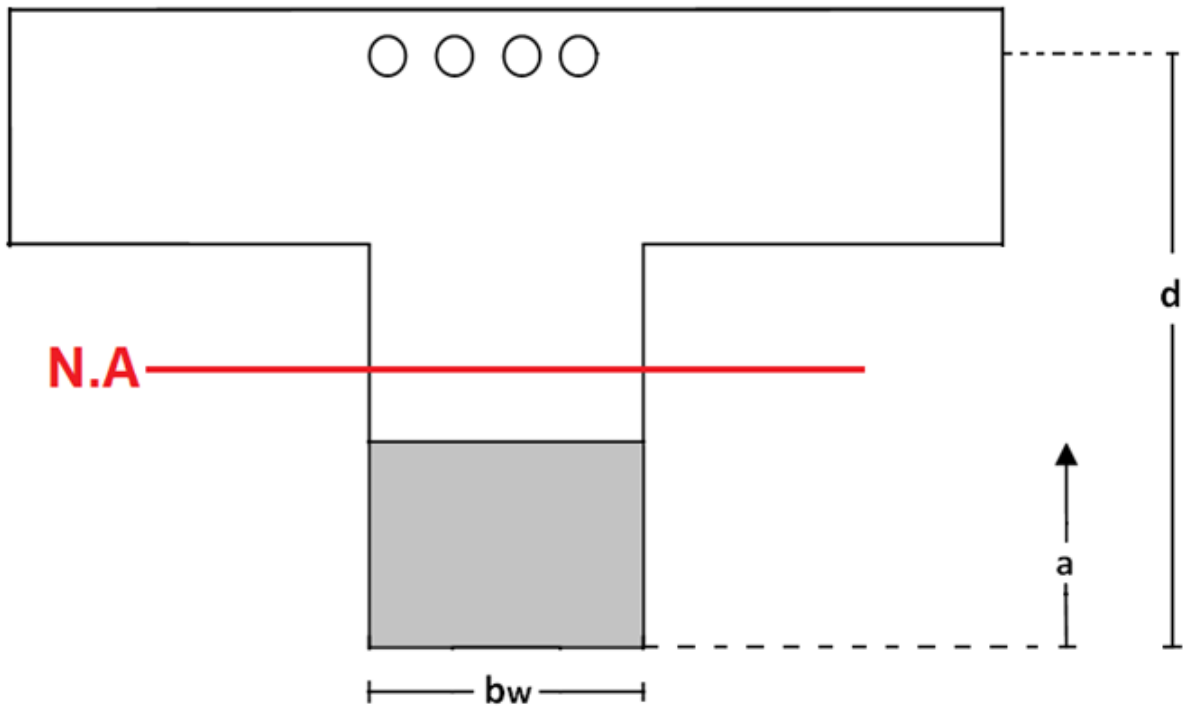

## 2)Flange in Compression but $a \leq h_f$ → Rectangular beam

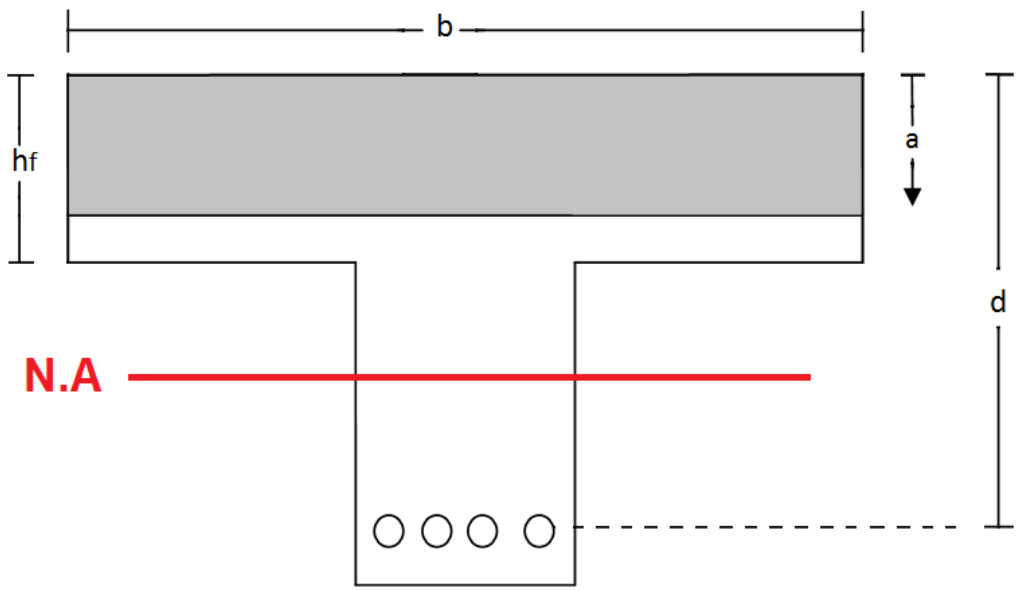


## 3)Flange in Compression but $a > h_f$ → T- beam

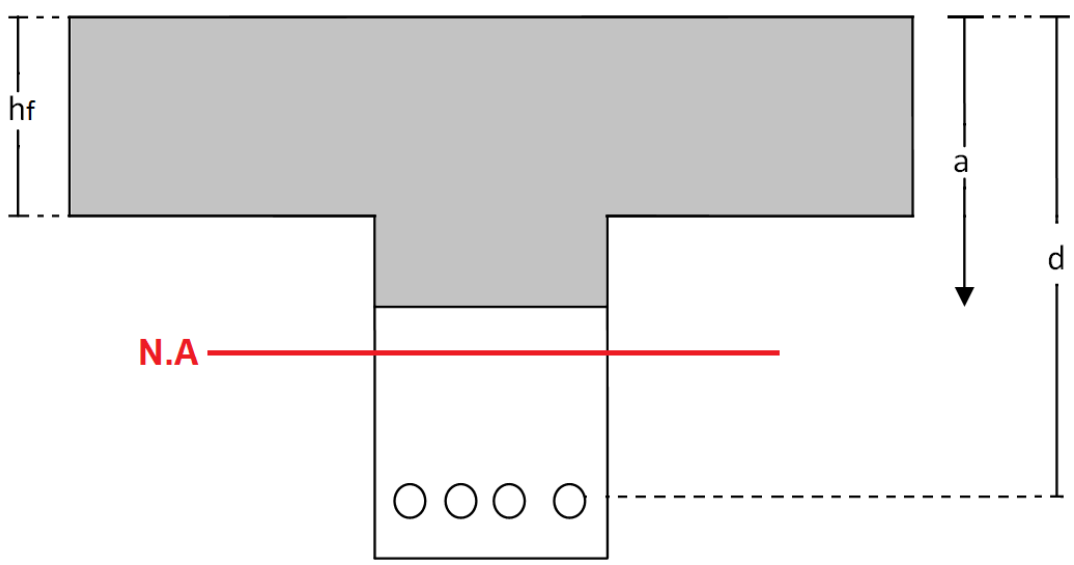

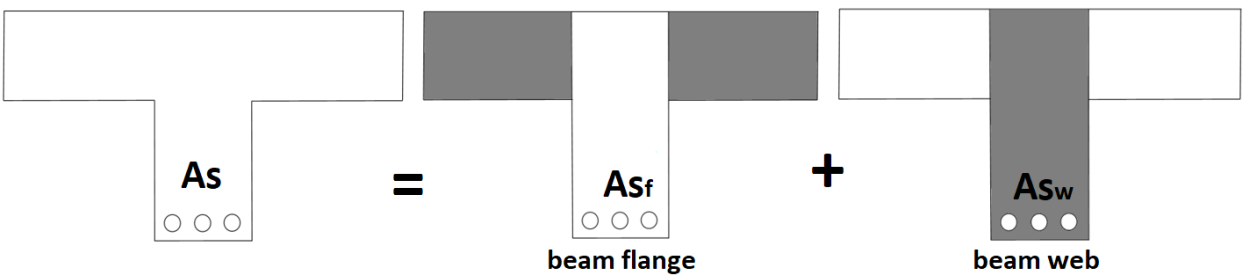


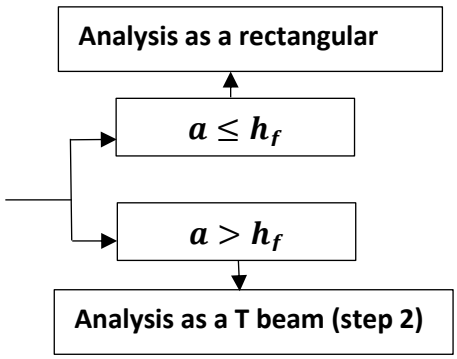


**1)Assume the beam is <u>rectangular beam</u> and find a**

**2)beam flange ($T_s$=$C_c$ ) :**

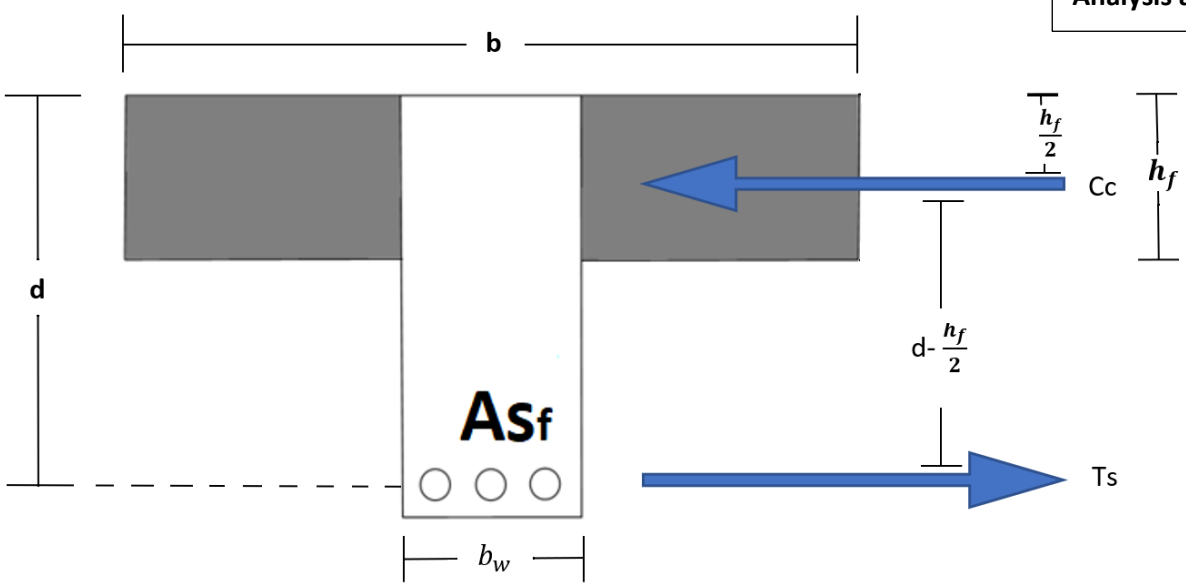


Assume $\varepsilon_s \geq \varepsilon_y \longrightarrow f_s = f_y$

$$T_s = C_c$$

**(stress)(area)=(stress)(area)**

$$(f_s)(As_f) = (0.85f_c)((b-b_w)(h_f))$$

**find $As_f$**

3) $As = As_f + As_w \longrightarrow$ **find** $As_w$

**4)beam web ($T_s$=$C_c$ ) :**

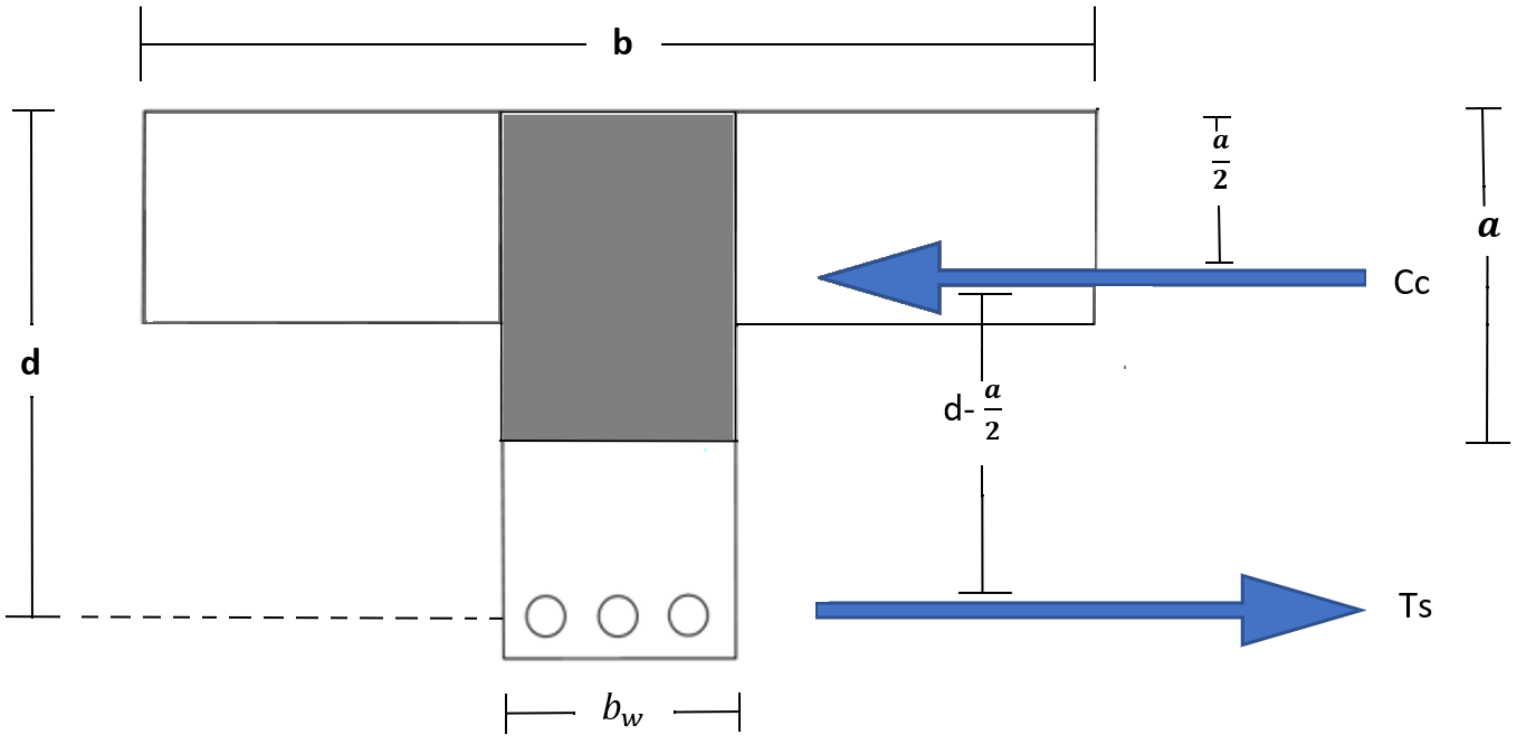


Assume $\varepsilon_s \geq \varepsilon_y \longrightarrow$ **$f_s$=$f_y$**

**$T_s$=$C_c$**

**(stress)(area)=(stress)(area)**

**($f_s$)( $As_w$)=(0.85fc)(a.$b_w$)**

find **a**

Then find **c** **(c=$\frac{a}{\beta}$)**

**5) check** $\varepsilon_s \geq \varepsilon_y$

$$\varepsilon_s = 0.003\left(\frac{d-c}{c}\right)$$

$$\varepsilon_y = \frac{fy}{E}$$

**6) determine moment :**

**<u>nominal</u>** moment capacity (<u>Mn</u>):-

$$\boldsymbol{Mn = Mn_f + Mn_w}$$

$$\boldsymbol{Mn_f = (\mathrm{force})(\mathrm{distance})}$$
$$\boldsymbol{= ((\mathrm{stress})(\mathrm{area}))(\mathrm{distance})}$$
$$\boldsymbol{= \left((\mathrm{fs})(As_f)\right)\left(\mathrm{d} - \frac{h_f}{2}\right)}$$

$$\boldsymbol{Mn_w = (\mathrm{force})(\mathrm{distance})}$$
$$\boldsymbol{= ((\mathrm{stress})(\mathrm{area}))(\mathrm{distance})}$$
$$\boldsymbol{= ((\mathrm{fs})(As_w))\left(\mathrm{d} - \frac{a}{2}\right)}$$

**<u>design</u>** moment capacity (<u>ØMn</u>)

$$\boldsymbol{ØM_n = (Ø)(M_n)}$$

# •Example(1):-

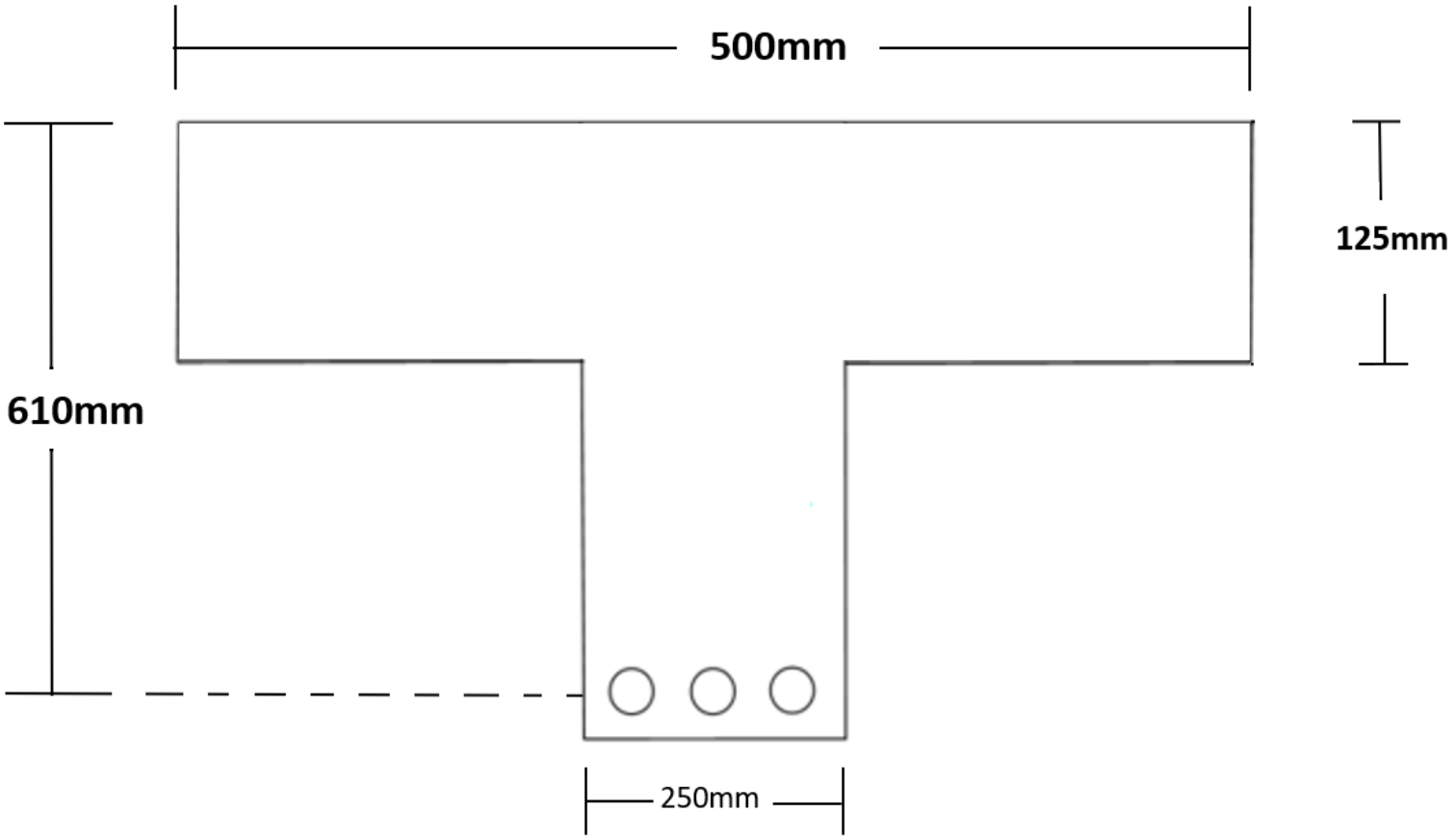


$A_S$=3060 $mm^2$

$f_c$=20 Mpa

$f_y$=420 Mpa

E=200 Gpa

Find design moment capacity.

# •Solution:-

**1)Assume the beam is <u>rectangular beam</u> ($a \leq h_f$)**

Assume $\varepsilon_s \geq \varepsilon_y \longrightarrow f_s = f_y \longrightarrow f_s = 420$

$$T_s = C_c$$

**(stress)(area)=(stress)(area)**

$$(f_s)(A_s) = (0.85 f_c)(a.b)$$

$$(420)(3060) = (0.85*20)(a*500)$$

**a=151.2mm** $\longrightarrow a > h_f \longrightarrow$ **T -beam**

**2)beam flange ($T_s = C_c$ ) :**

Assume $\varepsilon_s \geq \varepsilon_y \longrightarrow f_s = f_y \longrightarrow f_s = 420$

$$T_s = C_c$$

**(stress)(area)=(stress)(area)**

$$(f_s)(As_f) = (0.85 f_c)((b - b_w)(h_f))$$

$$(420)(3060) = (0.85*20)((500-250)(125))$$

$$As_f = 1264.88 \text{ mm}^2$$

3) $As = As_f + As_w$

$As_w = As - As_f$

$As_w = 3060 - 1264.88$

$As_w = 1795.12$ mm²

**4)beam web ($T_s$=$C_c$ ) :**

Assume $\varepsilon_s \geq \varepsilon_y \longrightarrow f_s = f_y \longrightarrow f_s = 420$

$T_s = C_c$

**(stress)(area)=(stress)(area)**

**($f_s$)( $As_w$)=(0.85fc)(a.$b_w$)**

**(420)( 1795.12)=(0.85*20)(a*250)**

**a=177.4mm**

$c = \frac{a}{\beta}$

$c = \frac{177.4}{0.85}$

**c=208.7mm**

fc≤28 ⟶ β=0.85

**5) check $\varepsilon_s \geq \varepsilon_y$**

$$\varepsilon_s = 0.003\left(\frac{d-c}{c}\right)$$

$$= 0.003\left(\frac{610-208.7}{208.7}\right)$$

**$= 0.00576\ (5.76*10^{-3})$**

$$\varepsilon_y = \frac{fy}{E}$$

$$\varepsilon_y = \frac{420*10^6}{200*10^9} = 0.0021\ (2.1*10^{-3})$$ **$\varepsilon_s > \varepsilon_y$..... OK**

**$\varepsilon_s \geq 0.005$ ⟶ tension controlled ⟶ Ø=0.9**

**6) determine moment :**

$$Mn = Mn_f + Mn_w$$

$$Mn = 290.85 + 393.03$$

$$Mn = 683.88 \text{ KN.m}$$

$$\emptyset Mn = 0.9 * 683.88$$

**= 615.49 KN.m**

$$Mn_f = (\text{force})(\text{distance})$$

$$= ((\text{stress})(\text{area}))(\text{distance})$$

$$= \left((\text{fs})(As_f)\right)\left(\text{d} - \frac{h_f}{2}\right)$$

$$= ((420)(1264.88))\left(610 - \frac{125}{2}\right)$$

**=290.85 KN.m**

$$Mn_w = (\text{force})(\text{distance})$$

$$= ((\text{stress})(\text{area}))(\text{distance})$$

$$= ((\text{fs})(As_w))\left(\text{d} - \frac{a}{2}\right)$$

$$= ((420)(1795.12))\left(610 - \frac{177.4}{2}\right)$$

**=393.03 KN.m**

# •Example(2) :-

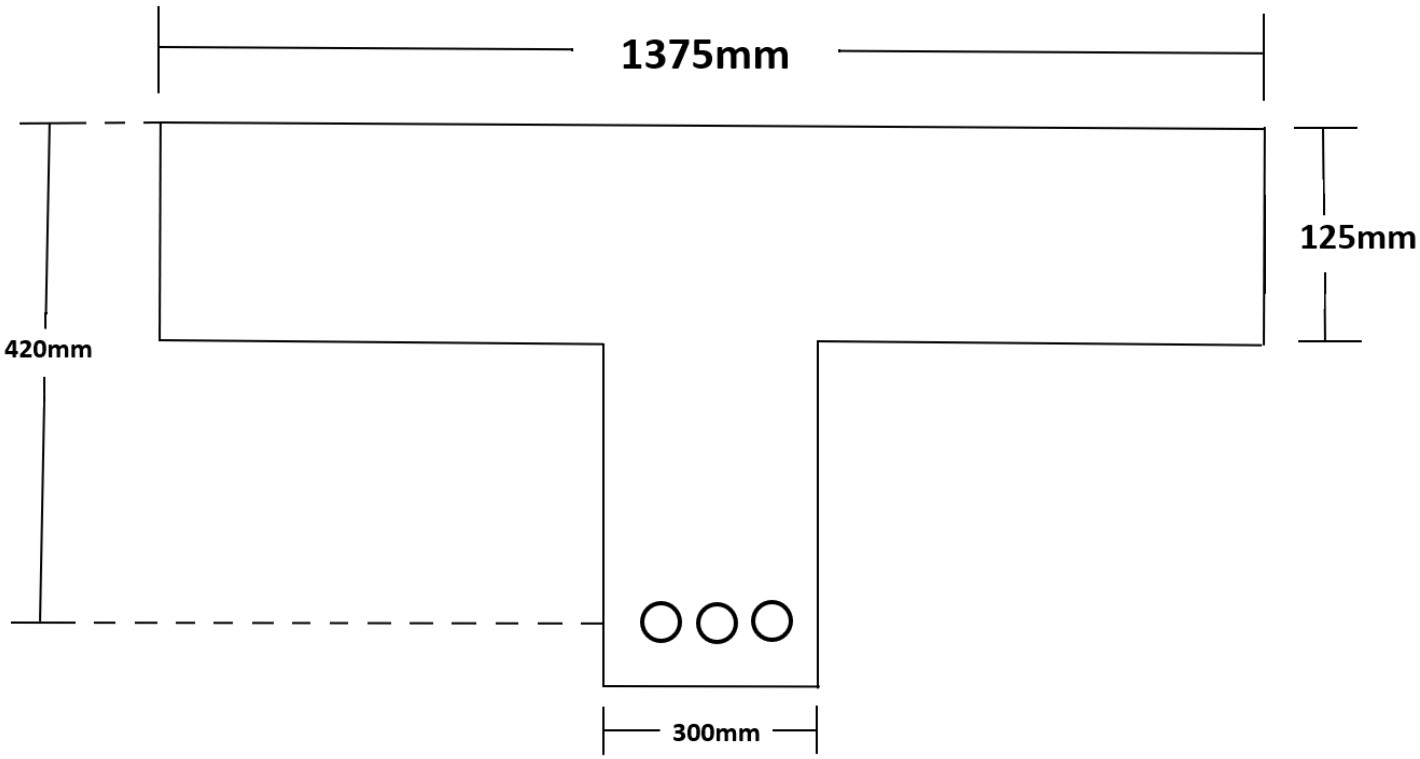


$A_S$=1704 $mm^2$

$f_c$=20 Mpa

$f_y$=420 Mpa

E=200 Gpa

Find design moment capacity.

# •Solution:-

**1)Assume the beam is <u>rectangular beam</u> ($a \leq h_f$)**

Assume $\varepsilon_s \geq \varepsilon_y \longrightarrow$ **$f_s = f_y \longrightarrow f_s = 420$**

**$T_s = C_c$**

**(stress)(area)=(stress)(area)**

**$(f_s)(A_s) = (0.85 f_c)(a.b)$**

**$(420)(1704) = (0.85*20)(a*1375)$**

**a=30.6mm $\longrightarrow a < h_f \longrightarrow$ rectangular beam**

**2) Analysis as a rectangular beam.**

$$c = \frac{a}{\beta}$$

$$c = \frac{30.6}{0.85}$$

**C=36mm**

$f_c \leq 28 \longrightarrow \beta = 0.85$

Check $\varepsilon_s \geq \varepsilon_y$ :-

$$\varepsilon_s = 0.003\left(\frac{d-c}{c}\right)$$

$$= 0.003\left(\frac{420-36}{36}\right)$$

**=0.032**

$$\varepsilon_y = \frac{fy}{E}$$

$$\varepsilon_y = \frac{420*10^6}{200*10^9}$$

**=0.0021**

$\varepsilon_s > \varepsilon_y$**..... OK**

**$\varepsilon_s \geq 0.005 \longrightarrow$ tension controlled $\longrightarrow$ Ø=0.9**

$$M_n = (\text{force})(\text{distance})$$

$$= ((\text{stress})(\text{area}))(\text{distance})$$

$$= ((0.85fc)(a.b))(d - \frac{a}{2})$$

$$= ((0.85*20)(30.6*1375))(420 - \frac{30.6}{2})$$

$$= 289.47 \text{ KN.m}$$

$$ØM_n = 0.9*289.47$$

$$= 260.52 \text{ KN.m}$$

# •Example(3) :-

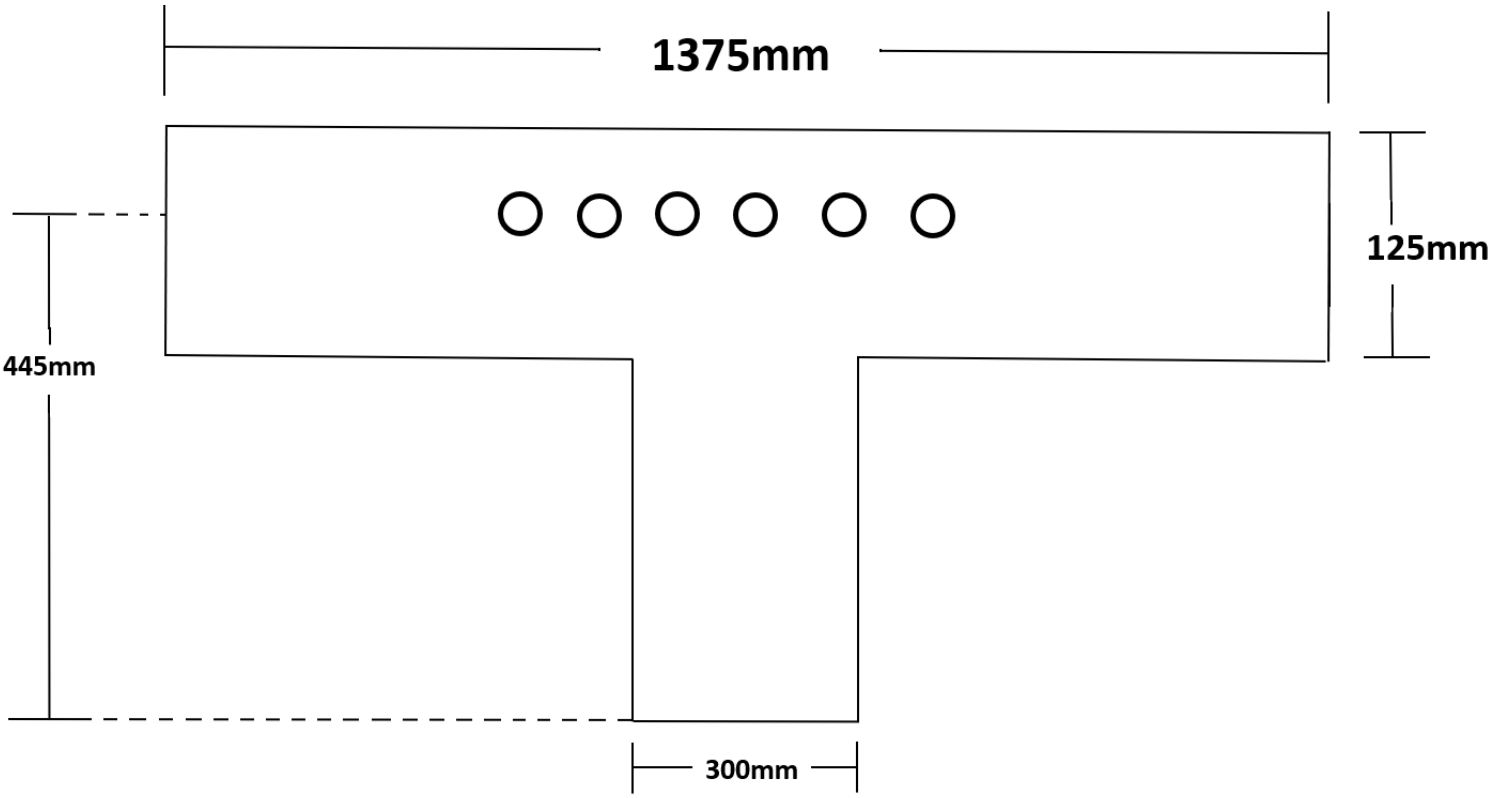


$A_S$=2270 $mm^2$

$f_c$=20 Mpa

$f_y$=300 Mpa

E=200 Gpa

Find design moment capacity.

# •Solution:-

**flange in tension** $\longrightarrow$ **rectangular beam**

Assume $\varepsilon_s \geq \varepsilon_y \longrightarrow f_s = f_y \longrightarrow f_s = 300$

$$T_s = C_c$$

**(stress)(area)=(stress)(area)**

$$(f_s)(A_s) = (0.85 f_c)(a.b_w)$$

$$(300)(2270) = (0.85*20)(a*300)$$

$$a = 133.52mm$$

$$c = \frac{a}{\beta}$$

$$c = \frac{133.52}{0.85}$$

**C=157.08mm**

$f_c \leq 28 \longrightarrow \beta = 0.85$

Check $\varepsilon_s \geq \varepsilon_y$ :-

$$\varepsilon_s = 0.003\left(\frac{d-c}{c}\right)$$

$$= 0.003\left(\frac{445-157.08}{157.08}\right)$$

$$= 0.00549\ (5.49*10^{-3})$$

$$\varepsilon_y = \frac{fy}{E}$$

$$\varepsilon_y = \frac{300*10^6}{200*10^9}$$

$$= 0.0015\ (1.5*10^{-3})$$

$\varepsilon_s > \varepsilon_y$..... **OK**

$\varepsilon_s \geq 0.005 \longrightarrow$ **tension controlled** $\longrightarrow$ **Ø=0.9**

$$M_n = (\text{force})(\text{distance})$$

$$= ((\text{stress})(\text{area}))(\text{distance})$$

$$= ((0.85fc)(a.b))(d - \frac{a}{2})$$

$$= ((0.85*20)(133.52*300))(445 - \frac{133.52}{2})$$

$$= 257.56 \text{ KN.m}$$

$$ØM_n = 0.9*257.56$$

$$= 231.8 \text{ KN.m}$$

# •Example(4) :- (مهم)

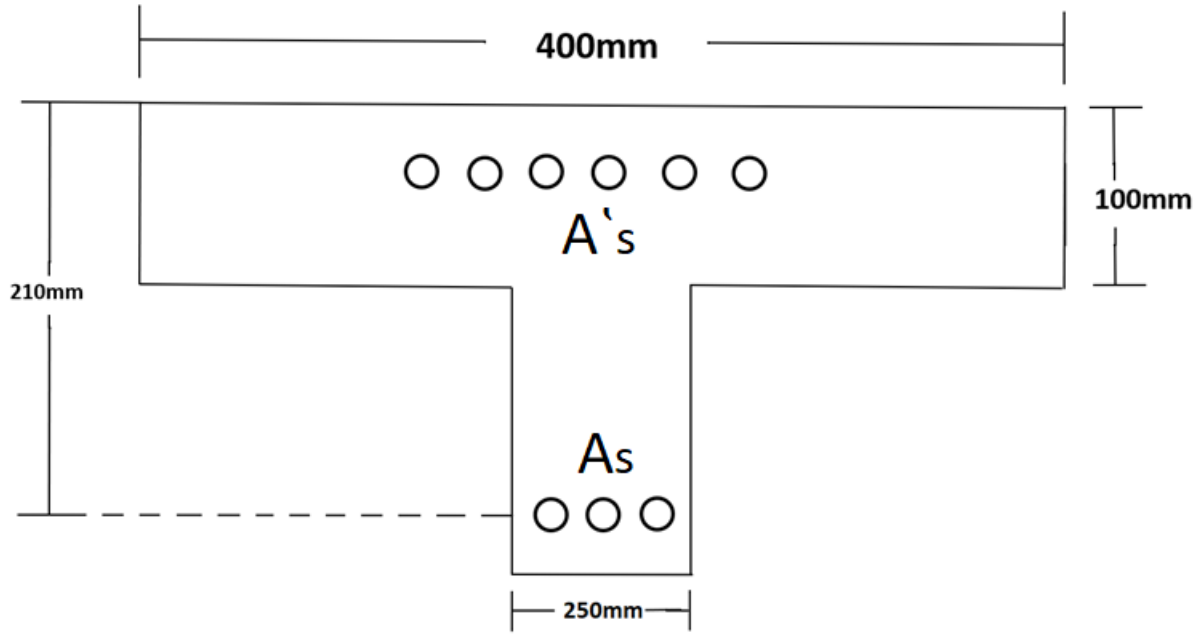


$A_S$=3060 $mm^2$

$A`_s$ =852 $mm^2$

$f_c$=20 Mpa

$f_y$=420 Mpa

E=200 Gpa

Find design moment capacity.

# •Solution:-

**1)Assume the beam is <u>rectangular beam</u> ($a \leq h_f$)**

Assume $\varepsilon_s \geq \varepsilon_y \longrightarrow f_s = f_y \longrightarrow f_s = 420$

$\varepsilon`_s \geq \varepsilon_y \longrightarrow f`_s = f_y \longrightarrow f`_s = 420$

$$T_s = C_C + C_s$$

**(stress)(area)=(stress)(area)+( stress)(area)**

$$(f_s)(A_s) = (0.85f_c)(a.b) + (f`_s)(A`_s)$$

$$(420)(3060) = (0.85*20)(a*400) + (420)(852)$$

**a=136.37mm** $\longrightarrow a > h_f \longrightarrow$ **T-beam**

## 2) Analysis as a T-beam (نقسم الشكل)

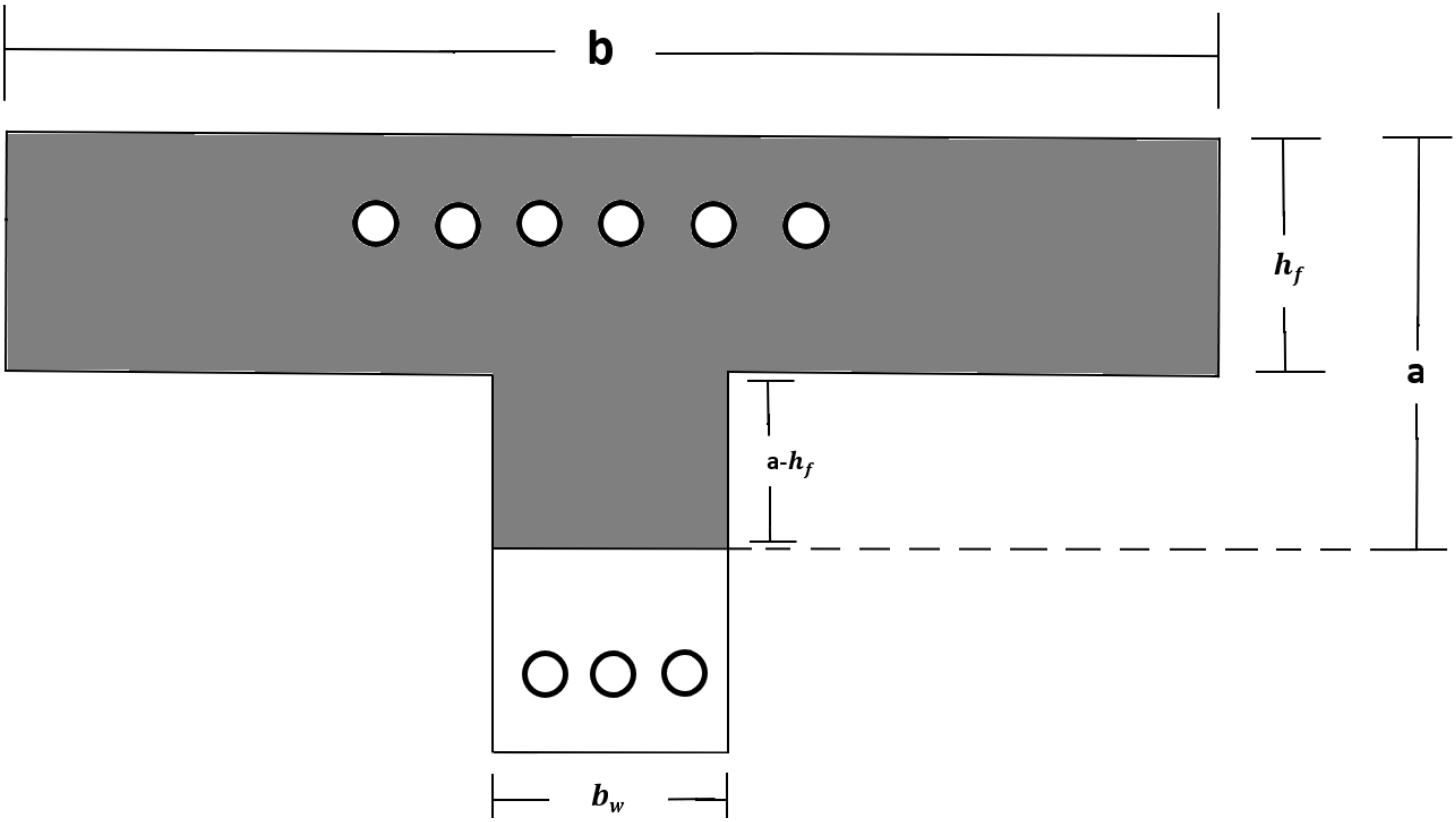


$$T_s = C_C + C_s$$

(stress)(area)=(stress)(area)+( stress)(area)

$$(f_s)(A_s) = (0.85f_c)\left((b.h_f) + (a - h_f)(b_w)\right) + (f`_s)(A`_s)$$

$$(420)(3060) = (0.85*20)\left((400*100) + (a-100)(250)\right) + (420)(852)$$

**a=158.2mm**

$$c = \frac{a}{\beta}$$

$$c = \frac{158.2}{0.85}$$

**c=186.11mm**

$f_c \leq 28 \longrightarrow \beta = 0.85$

1)Check $\varepsilon`_s \geq \varepsilon_y$

$$\varepsilon`_s = 0.003\left(\frac{c-d`}{c}\right)$$

$$= 0.003\left(\frac{186.11-65}{186.11}\right)$$

**=0.00195 ($1.95*10^{-3}$)**

$$\varepsilon_y = \frac{fy}{E}$$

$$\varepsilon_y = \frac{420*10^6}{200*10^9}$$

**=0.0021 ($2.1*10^{-3}$)**

$\varepsilon`_s < \varepsilon_y$... **<u>Not</u> OK**

$$(f_s)(A_s) = (0.85f_c)\left((b.h_f)+(c.\beta-h_f)(b_w)\right)+\left(E*10^3*0.003\left(\frac{c-d`}{c}\right)\right)(A`_s)$$

$$(420)(3060) = (0.85*20)\left((400*100)+(c*0.85-100)(250)\right)+\left(200*10^3*0.003\left(\frac{c-65}{c}\right)\right)(852)$$

**c=191.65mm**

a=c.β

a=191.65*0.85

**a=162.9mm**

2)Check $\varepsilon_s \geq \varepsilon_y$ :-

$$\varepsilon_s = 0.003\left(\frac{d-c}{c}\right)$$

$$= 0.003\left(\frac{210-191.65}{191.65}\right)$$

**=0.00<u>0</u>287 ($2.87*10^{-4}$)... <u>Not</u> OK**

$$\left(E*10^3*0.003\left(\frac{d-c}{c}\right)\right)(A_s)=(0.85f_c)\left((b.h_f)+(c.\beta-h_f)(b_w)\right)+\left(E*10^3*0.003\left(\frac{c-d`}{c}\right)\right)(A`_s)$$

$$\left(200*10^3*0.003\left(\frac{210-c}{c}\right)\right)(3060)=(0.85*20)\left((400*100)+(c*0.85-100)(250)\right)+\left(200*10^3*0.003\left(\frac{c-65}{c}\right)\right)(852)$$

**c=135.46mm**

a=c.β

a=135.46*0.85

**a=115.14mm**

$$\varepsilon`_s=0.003\left(\frac{c-d`}{c}\right)$$

$$=0.003\left(\frac{135.46-65}{135.46}\right)$$

**=0.00156**

$$\varepsilon_s=0.003\left(\frac{d-c}{c}\right)$$

$$=0.003\left(\frac{210-135.46}{135.46}\right)$$

**=0.00165**

$\varepsilon_s < \varepsilon_y$ ⟶ **compression controlled** ⟶ **Ø=0.65**

**ملاحظة مهمة:-**

**دائما الي بحدد قيمة Ø هي $\varepsilon_s$ مش $\varepsilon`_s$**

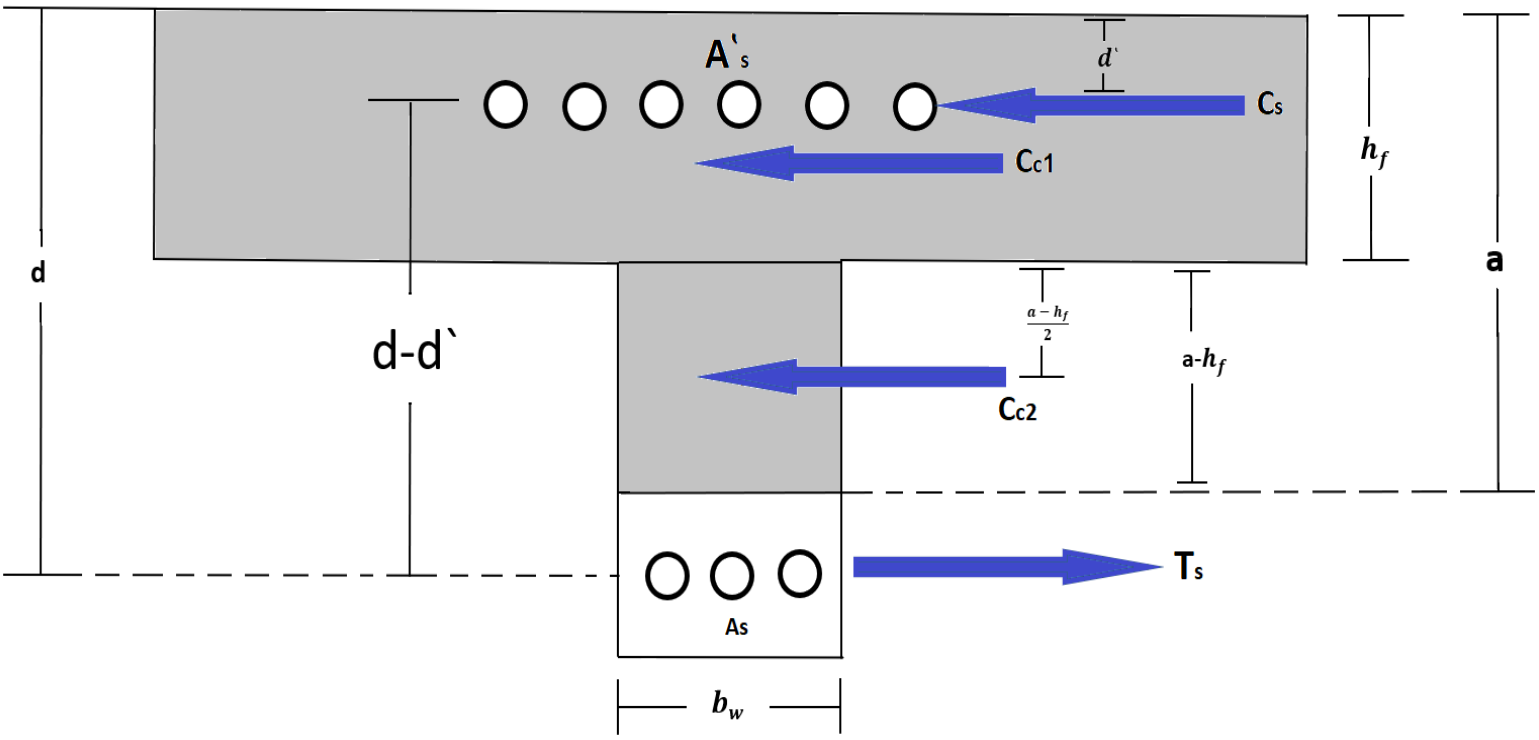


**$C_{c1}$=(stress)(area)**

**=(0.85 $f_c$)(b.$h_f$)**

**=(0.85*20)(400*100)**

**=680000 KN**

---

**$C_{c2}$=(stress)(area)**

**=(0.85 $f_c$)((a-$h_f$)($b_w$))**

**=(0.85*20)((115.14-100)(250))**

**=64345 KN**

---

**$C_s$=(stress)(area)**

$$=\left(E*10^3*0.003\left(\frac{c-d`}{c}\right)\right)(A`_s)$$

$$=\left(200*10^3*\ 0.003\left(\frac{135.46-65}{135.46}\right)\right)(852)$$

**= 265902.49 KN**

$$M_n = (\text{force})(\text{distance}) + (\text{force})(\text{distance}) + (\text{force})(\text{distance})$$

$$= (C_{c1})(\text{distance}) + (C_{c2})(\text{distance}) + (C_s)(\text{distance})$$

$$= (C_{c1})\left(d - \frac{h_f}{2}\right) + (C_{c2})\left(d - \left(h_f + \frac{a - h_f}{2}\right)\right) + (C_s)(d - d`)$$

$$= (68000)\left(210 - \frac{100}{2}\right) + (64345)\left(210 - \left(100 + \frac{115.14 - 100}{2}\right)\right) + (265902.49)(210 - 65)$$

$$= 153.94 \text{ KN.m}$$

$$Ø M_n = 0.65 * 153.94$$

$$= 100.06 \text{ KN.m}$$